Bohunt School *(Wokingham)*

Solar-Powered Weather Station

Stage 3: Switching on/off ancillary devices to conserve energy

I'm one of the students who has been attending the (after-school) IoT Computer Club at Bohunt Wokingham academy here in the UK.

This is a write-up of my personal project to design and build a solar-powered weather station.

Objectives

My overall objective is to build a solar-powered weather station that will be located in one of the school's gardens to measure temperature, humidity and air pressure. The data will be sent via WiFi to the 'Cloud' and by writing some programs the information should be made available locally or remotely.

The task I'm going to describe in this particular document is:

- ***Switching on/off ancillary devices (e.g. BME280 and ADS1115 modules) to conserve the battery's energy***

First idea

The first idea I had was to use an NPN transistor to switch the voltage, that came out of the 3V3 pin of the Wemos, on and off.

Here's a very rough sketch of my first circuit.

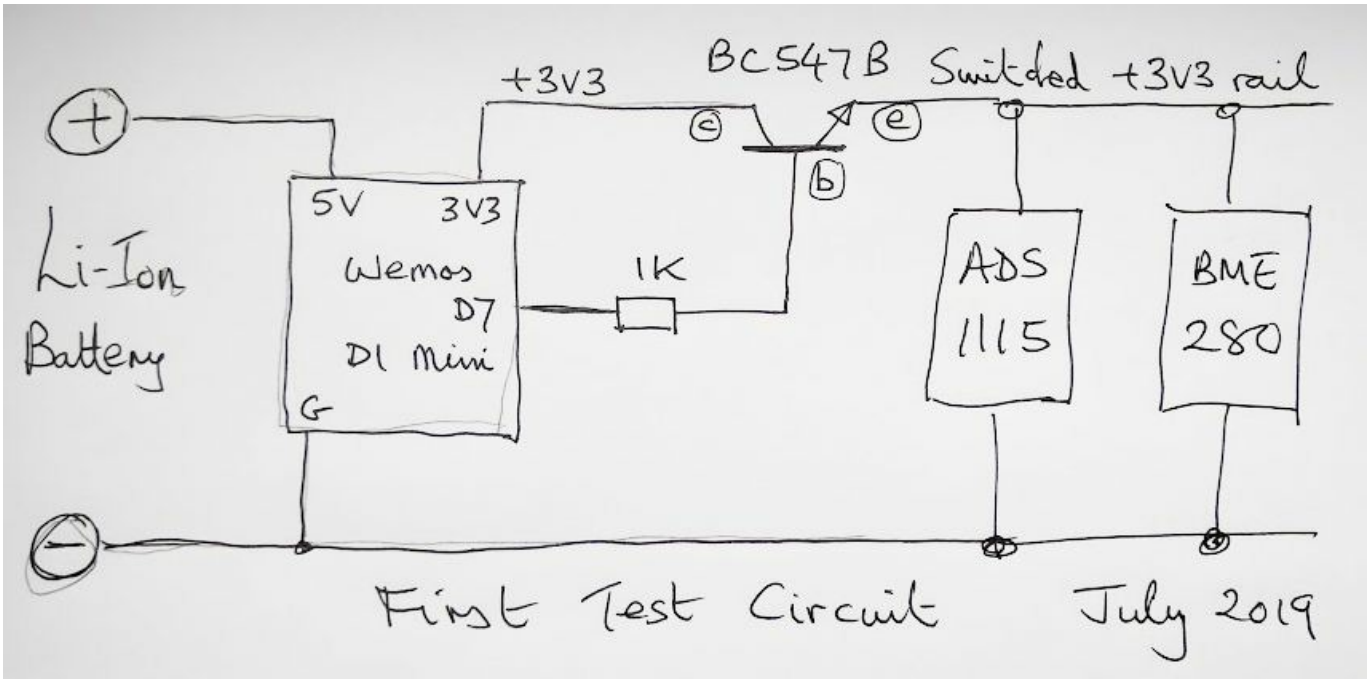

The transistor I used was a BC547B, an NPN small-signal switching transistor.

The base was driven via a 1K resistor from pin D7 on the Wemos.

Bohunt School (Wokingham)

Solar-Powered Weather Station

Stage 3: Switching on/off ancillary devices to conserve energy

Although the circuit worked fine (it switched on and off) the output voltage was reduced to under +3V. I talked to Mr D about this and he explained that when a transistor is 'saturated' there is a voltage drop across the collector-to-emitter. I checked this on the BC547B data-sheet and found VCE(sat) was 0.6V.

Mr D also suggested… "Why don't you try using a MOSFET as they have a very low on-resistance, so voltage drop across source to drain will be very low ?"

I ordered a ZVP3306A (as this was the first one I found on Google) and replaced it for the BC547B. I needed to work out what the different names of the pins meant (Source, Gate and Drain). Unfortunately this setup didn't work at all !!!

Mr D said it would be sensible to make a small test circuit rather than connecting it to the Wemos, so I could try different input voltages. I discovered that if I used +5V on the 'source' pin I could get the circuit to work.

The problem was that the input I had from the Li-Ion battery was +3.1 to +4.2V which is nowhere near the 5V. Mr D explained the problem was probably the Gate-Source Threshold Voltage and that I should look it up on the data-sheet.

I found out the Vgs(th) for the ZVP3306A was -3.5V which meant it would have problems working in my circuit !!!

Mr D suggested looking for a device with a lower threshold as there were MOSFETS specifically designed for use in +3V3 logic circuits.

I found the ZVP4424A MOSFET that had a Vgs(th) of -1.4V, so full of hope I ordered a couple of these components. They were a lot more expensive, but as Mr D explained "you're paying for a device with a very low Vgs(th)".

When the MOSFETs arrived I tried one in my test circuit and it worked perfectly, so I wired it in to the breadboard so it was driven by D7 output pin.

Again it worked perfectly.

So in summary, I came along a journey in which I found out about VCE (on a bipolar junction transistor BJT) and Vgs(th) on a MOSFET.

On the next page is another rough sketch of the final circuit.

Bohunt School (Wokingham)

Solar-Powered Weather Station

Stage 3: Switching on/off ancillary devices to conserve energy

Final circuit

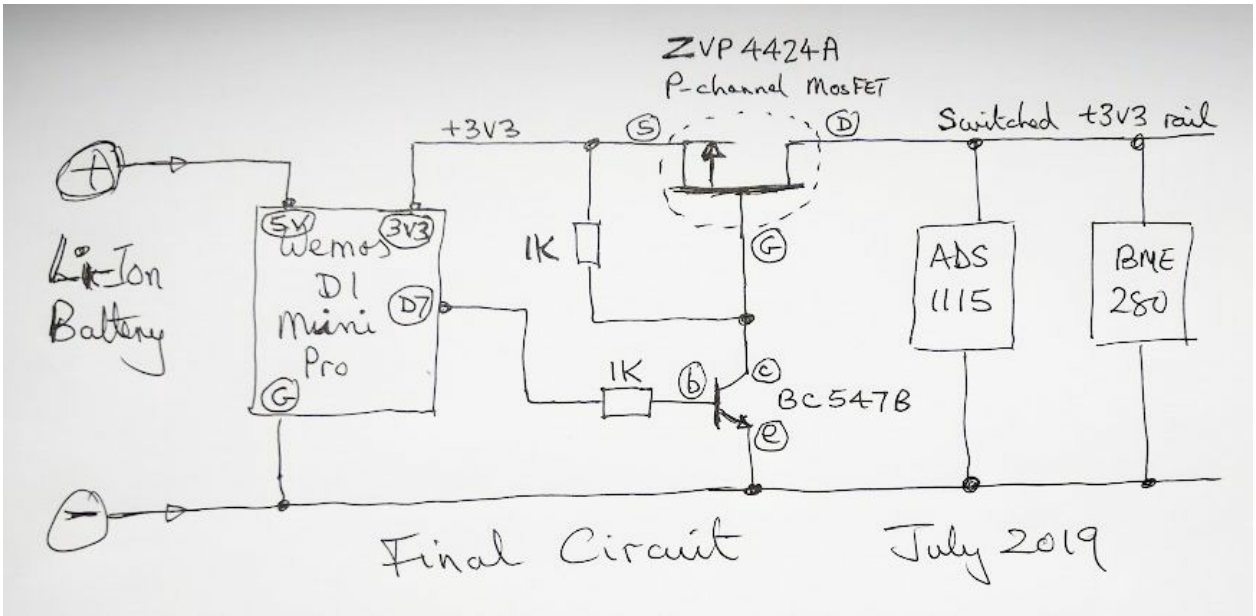

The 'on resistance' of the ZVP4424A is very low so the voltage on the 'switched +3V3 rail' is nearly the same as the +3V3 input voltage.

Here's a layout of the breadboard for my first circuit with the BJT transistor.

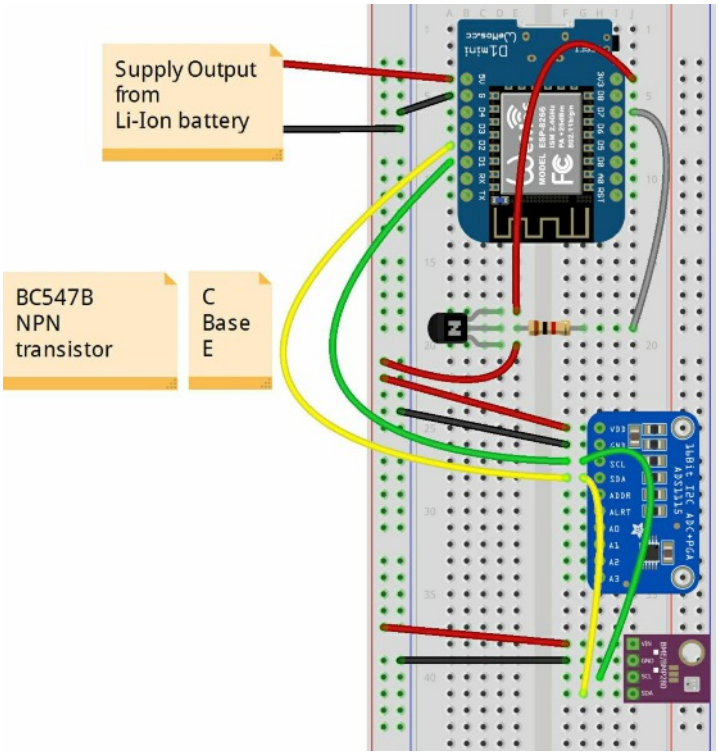

Bohunt School *(Wokingham)*

Solar-Powered Weather Station

Stage 3: Switching on/off ancillary devices to conserve energy

Breadboard layout for the final circuit

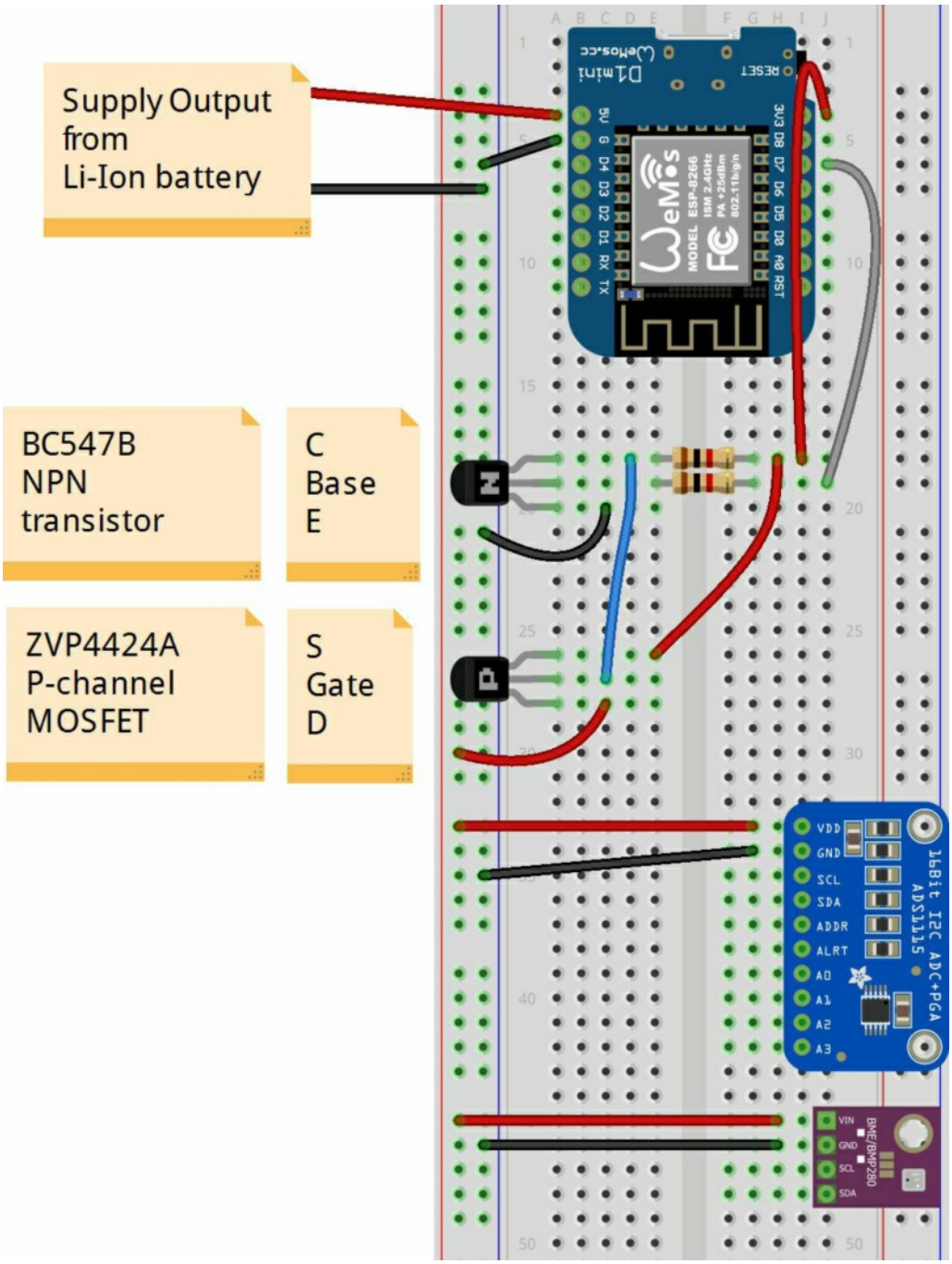

Note: I've left the SDA and SCL connection off of the diagram so it's easier to see the wiring around the switching transistors.

The next thing you need to do is read the write-up for Stage-4.
"Measuring and reporting air temperature, humidity and pressure and sending this data to the 'Cloud'"

I need to thank Mr D for helping and encouraging me with this project